ROBOT 80 VA1

IMT ROBOT

PRODUCT DESCRIPTION

Max. Power output	7.0 kW
Power output S6 40%	3.8 kW
Power output S1 100%	3.0 kW
Rotation speed	to 40.000 rpm
Dimension	Ø 62 / 80 x 80 mm
Spindlehousing	high-strength aluminium
Spindle interface	HSK - E25

FEATURES

- Air nozzles
- MMS “light” retrofit
- Hybrid-ceramic-bearings
- Permanent grease lubricated bearings
- Liquid cooling
- Air seal
- Pneumatic tool clamping
- Tool change control
- Taper air purge
- Speed sensor
- Motor temperature control

Optional Spindlebracket and Ionisationbar

Available equipment:
Frequency converter, Cooling unit, Motor cable, Spindlebracket, Collet chucks, Collet

IMT
www.imt.de
Made in Germany

ROBOT 80 VA1

IMT ROBOT

TECHNICAL SPECIFICATIONS

Motor data

Motor variant	80-02
Motor type	asynchron
Number of pol´s	2
Speed range (rpm) max.	40.000
Power output S1/S6 40% (kW)	3.0 / 3.8
Torque S1/S6 40% (Nm)	0.8 / 1.0
Frequency range (Hz) max.	667
Max. voltage (Volt)	220
Nominal current S1/S6 40% (Amp.)	10 / 12
Maximum current (Amp.)	14

Bearing data

Bearings	ceramic - hybrid
Number of Bearings	4
Lubrication	grease
Temperature protection	-
Recommended air seal (bar)	1 - 2
Air seal requirements (l/min)	60 l/min (1 bar)

Shaft data

Run-out accuracy	
– Axial eccentricity (µm)	< 1
– Spindle taper (µm)	< 2
Balance quality	G 0.4
Vibration (mm/s)	< 1.5
Static axial stiffness (N/µm)	18
Static radial stiffness (N/µm)	34

Tooling

Spindle interface	HSK - E25
Tool clamping / release pressure (bar)	5 - 8
Taper cleaning pres. (bar)	1
Max. Tool diameter (mm)	10

ATC control

Number of sensors	2
Type of sensors	PNP
Controlled positions	
– tool clamped	✓
– tool unclamped	✓
– clamped no tool	-

Speed control

Inductive sensor	6 Impulse/RPM Namur

Spindle cooling

Recommended coolant	liquid water
Cooling requirements (kW)	0,3
Coolant temperature (° C)	20 ± 2
Max. coolant pressure (bar)	3

Connections

Power connection	9 - pol
ATC control	12 - pol
Encoder / Speed sensor	integrated into power connection and ATC control
Coolant	Self locking connector 2 x Ø 8mm (1/8")
Air seal	1 x Ø 6mm (M5)
ATC	1 x Ø 6mm (M5)
Taper air purge	1 x Ø 6mm (M5)
Air nozzle	1 x Ø 6mm (M5)

Spindle diameter (mm)	Ø 62 / 80 x 80 mm
Spindle arretation	-
Weight (kg)	5,2

Power diagram

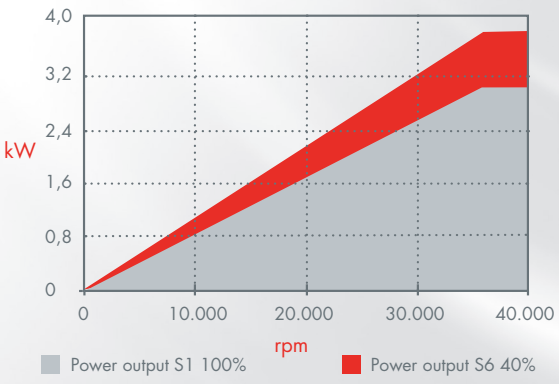

Torque diagram

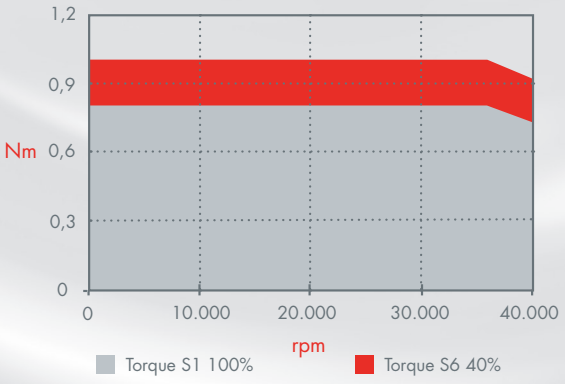

IMT — www.imt.de — Made in Germany

IMT ROBOT

MAßZEICHNUNG
DIMENSIONAL DRAWING

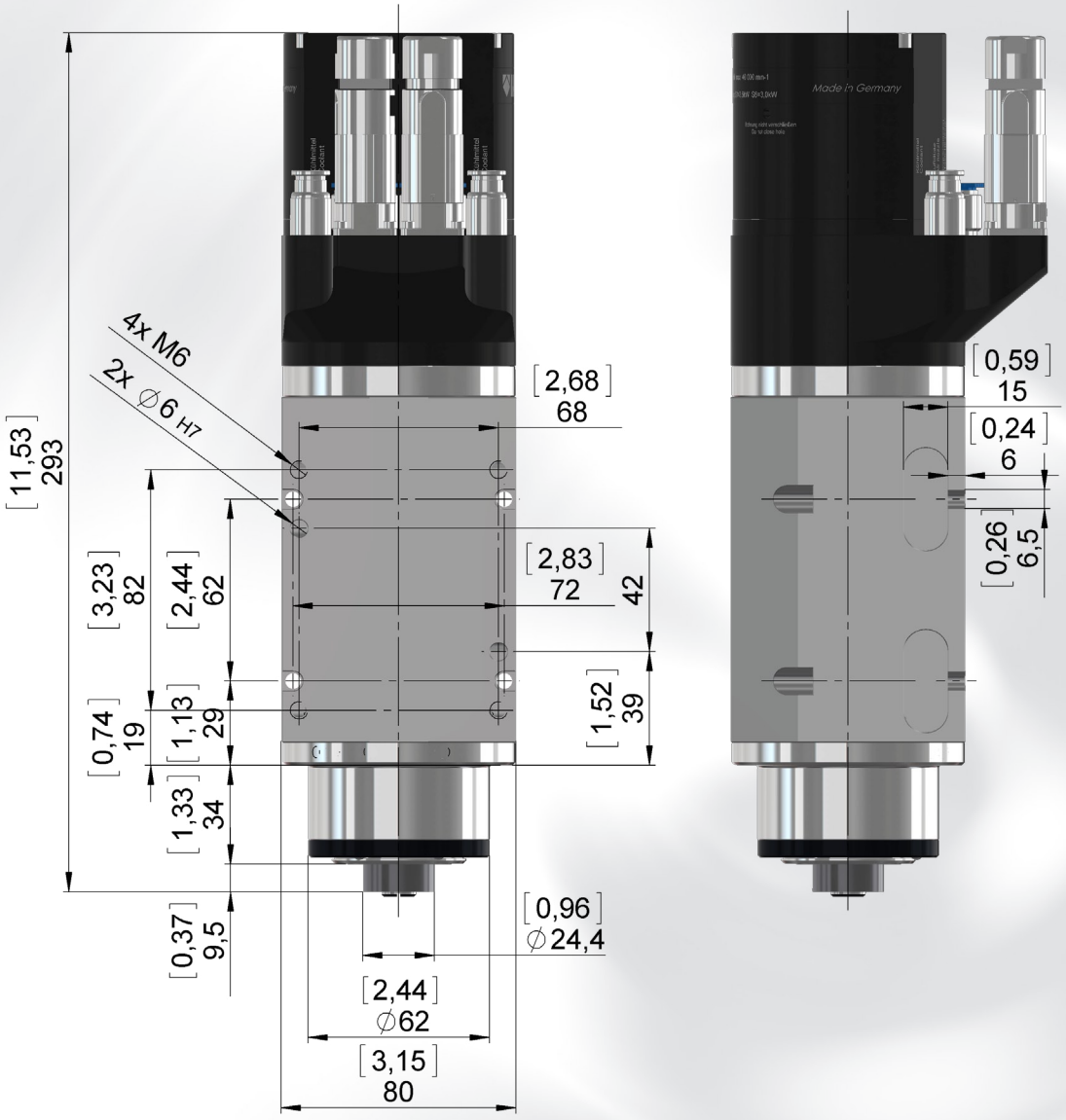

[...] - inch

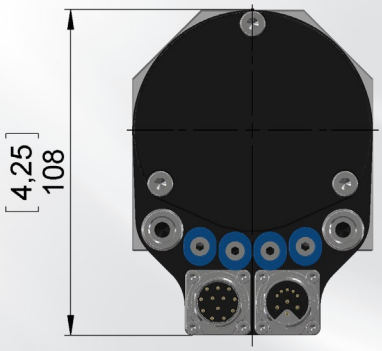

IMT www.imt.de Made in Germany

IMT ROBOT

Spindelanschlüsse
Spindle connections

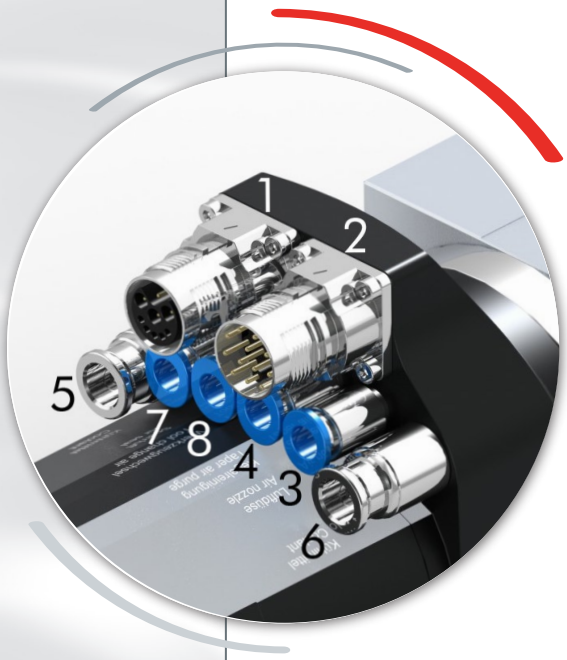

1 Leistungsstecker 9-pol
Power connection 9-pin

2 Stecker Werkzeugüberwachung 12-pol
ATC control plug 12-pol

3 Luftdüsenanschluss
Air nozzle connection

4 Kegelreinigungsanschluss
Taper air purge connection

5 Kühlmittelanschluss Vorlauf
Coolant connection forward flow

6 Kühlmittelanschluss Rücklauf
Coolant connection return flow

7 Sperrluftanschluss
Air seal connection

8 Werkzeugwechselanschluss
Tool change connection

IMT
www.imt.de
Made in Germany